PARTS MANUAL

LOAD KING

4000 GALLON WATER TANK

REV D

NOVEMBER 3, 2020

Table of Contents

REVISION CONTENT 3

INTRODUCTION.....4

DEFINITIONS USED IN THIS MANUAL.....5

SAFETY WARNINGS.....5

LOAD KING WATER TANK LABELS.....6

ASSEMBLY: WATER TRUCK KIT..... 8

WTR00038 WELDMENT, HOSE TRAY TANDEM AXLE 9

WTR00083 WELDMENT, 4000GAL WATER TANK 10

WTR00092 ASSEMBLY, LADDER W/ 2.5’’ FILL PIPE 11

WTR00093 ASSEMBLY, FRONT SPRAY FLAT HEAD.....12

WTR00094 ASSEMBLY, MID SPRAY BAR 13

WTR00095 ASSEMBLY, REAR SPRAY BAR 14

WTR00097 ASSEMBLY, SIDESPRAY 15

WTR00098 ASSEMBLY, PUMP 16

WTR00099 ASSEMBLY, SUCTION PIPING 17

WTR00103 ASSEMBLY, HOSE REEL 18

WTR00104 ASSEMBLY, LIGHTING WATER TRUCK 19

WTR00106 ASSEMBLY, 1.5’’ TANK DRAIN 20

WTR00107 ASSEMBLY, SIGHT TUBE 20

WTR00110 ASSEMBLY, MOUNTING COMPONENTS 21

WTR00112 ASSEMBLY, HOSES 22

WTR00113 ASSEMBLY, CONTROLS 23

WTR00169 .25" RUBBER ISOLATOR 23

WTR00183 ASSEMBLY, MUDFLAP INSTALL 24

REVISION HISTORY

NAME	DATE	DESCRIPTION OF CHANGE	REV.
J Haas	3/27/18	INITIAL RELEASE	A
J Haas	1/3/20	ROPE PACKING KIT ADDED, PG 16	B
J Haas	2/25/20	AIR CONTROL SWITCH ADDED, PG 23	C
J Haas	11/3/20	WTR00230 WAS WTR00170, PG 21	D

Company

Load King has been producing quality trailers since 1956. We are located in Elk Point, South Dakota.

Although the trailer industry is an ever-changing environment and we've seen many changes over the years, we have remained committed to the simple philosophy that we will make a reasonable profit through the designing, manufacturing, and marketing of top quality products that we can always be proud to call Load King. We have not, and will not, compromise in this area.

Quality shows in all facets of an operation, from the moment you make your first phone call for a product inquiry to the time you sell your used equipment and realize you've received top dollar on your sale. We continue to strive for excellence in every area and never quit trying to improve. We have earned our reputation believing that quality is value and value sells products.

Through our shared Engineering, Marketing and Sales teams, Load King and Custom Truck One Source bring that tradition of quality and value to another market with the Load King Water Truck.

About Custom Truck One Source

Beginning in February of 2015, three family-owned and operated companies (Custom Truck & Equipment, Utility Fleet Sales and Forestry Equipment of VA) joined together to form what is now Custom Truck One Source. Shortly after its inception, UCO Equipment became a part of the CTOS family along with TNT Equipment six months later. In December 2015, CTOS welcomed its sixth company under its brand, Load King, a leading manufacturer of high-quality and customizable trailers.

The announcement of the partnership represented the platform's collective commitment to the continued growth and dominance of each legacy company's individual offerings, now compounded to leverage the expertise of the team and, ultimately, better serve loyal CTOS customers all over the world. CTOS will build upon the market positions of each legacy company, while serving as a single source supplier of specialty equipment and services for the utility and heavy equipment industries. The utility and heavy equipment platform collectively offers sales, rentals, parts and after market services, remanufacturing, customized equipment and transportation.

Definitions Used in this Manual

The following table describes text and symbols used to highlight important information.

SIGNAL WORD	SYMBOL	EXPLANATION
WARNING	⚠	WARNING IS USED TO ALER THE READERS ABOUT THE POTENTIAL FOR SERIOUS INJURY, DEATH, OR SERIOUS DAMAGE TO EQUIPMMENT
REVISION	B	INDICATES THE LOCATION OF A REVISION CHANGE

Table—1

The following table describes line types in the parts drawings.

LINE FONTS		DESCRIPTION
————	SOLID LINE FONT	INDICATES PART OUTLINES IN THE DRAWINGS.
- - - - - - - - - -	DASHED LINE FONT	INDICATES HOW TWO OR MORE PARTS ASSEMBLE.
⬚ - - 1	KEYED BOX/BRACKET	INDICATES PARTS INSIDE OF A SUB ASSEMBLY.
◄ - - - - 1	DASHED KEY	INDICATES PART NOT VISIBILE OR HIDDEN IN VIEW

Table—2

SAFETY WARNINGS

⚠ **WARNING: All repairs, adjustments and maintenance not described in the Operator's Manual must be performed by Qualified Service Personnel.**

⚠ **WARNING: Hydraulic system components can contain high pressures of which, if suddenly or unexpectedly released, can cause serious injury or death by direct contact with the pressurized oil or by contact with moving machine components.**

LOAD KING WATER TANK LABELS .

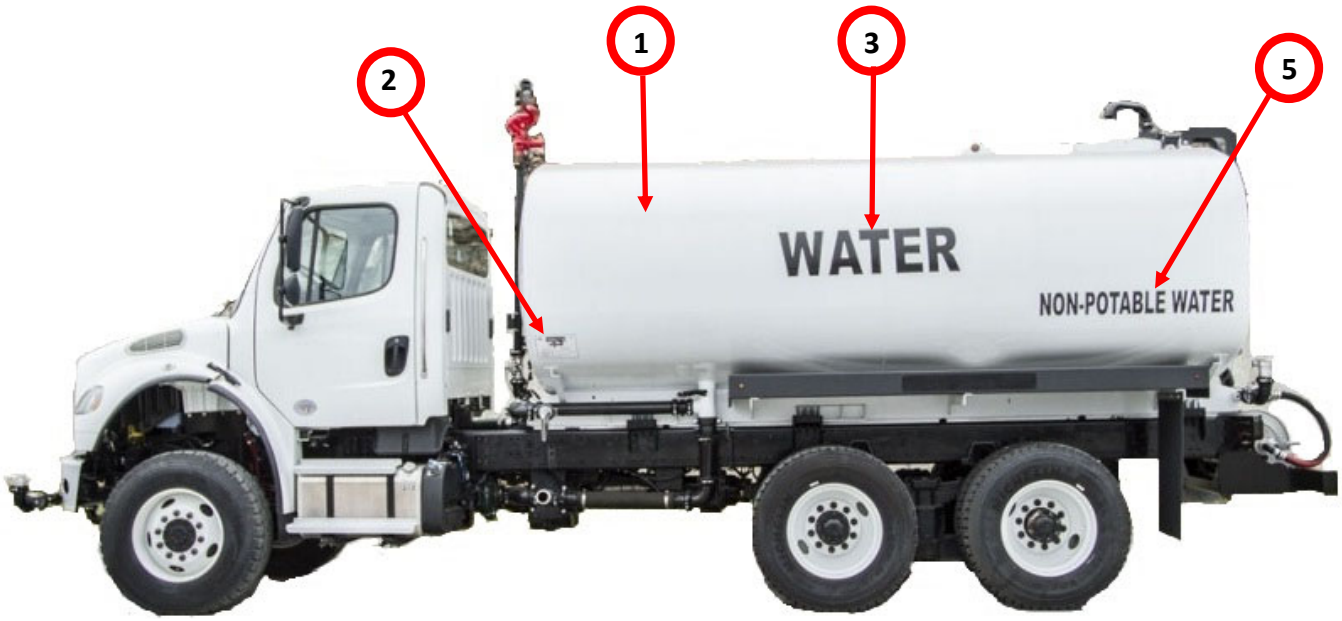

KEY	DESCRIPTION	QTY.
1	LOAD KING LOGO DECAL	3
2	CREEK FILL DECAL	1
3	10" x 43" WATER DECAL	2
4	6" x 16" WATER DECAL	1
5	NON-POTABLE DECAL	3
6	TANK FILL GUAGE DECAL	1
7	WHITE CONSPICUITY TAPE	4FT

LOAD KING WATER TANK LABELS .

1

2

WATER

3

WATER

4

NON-POTABLE

5

6

ASSEMBLY: WATER TRUCK KIT .

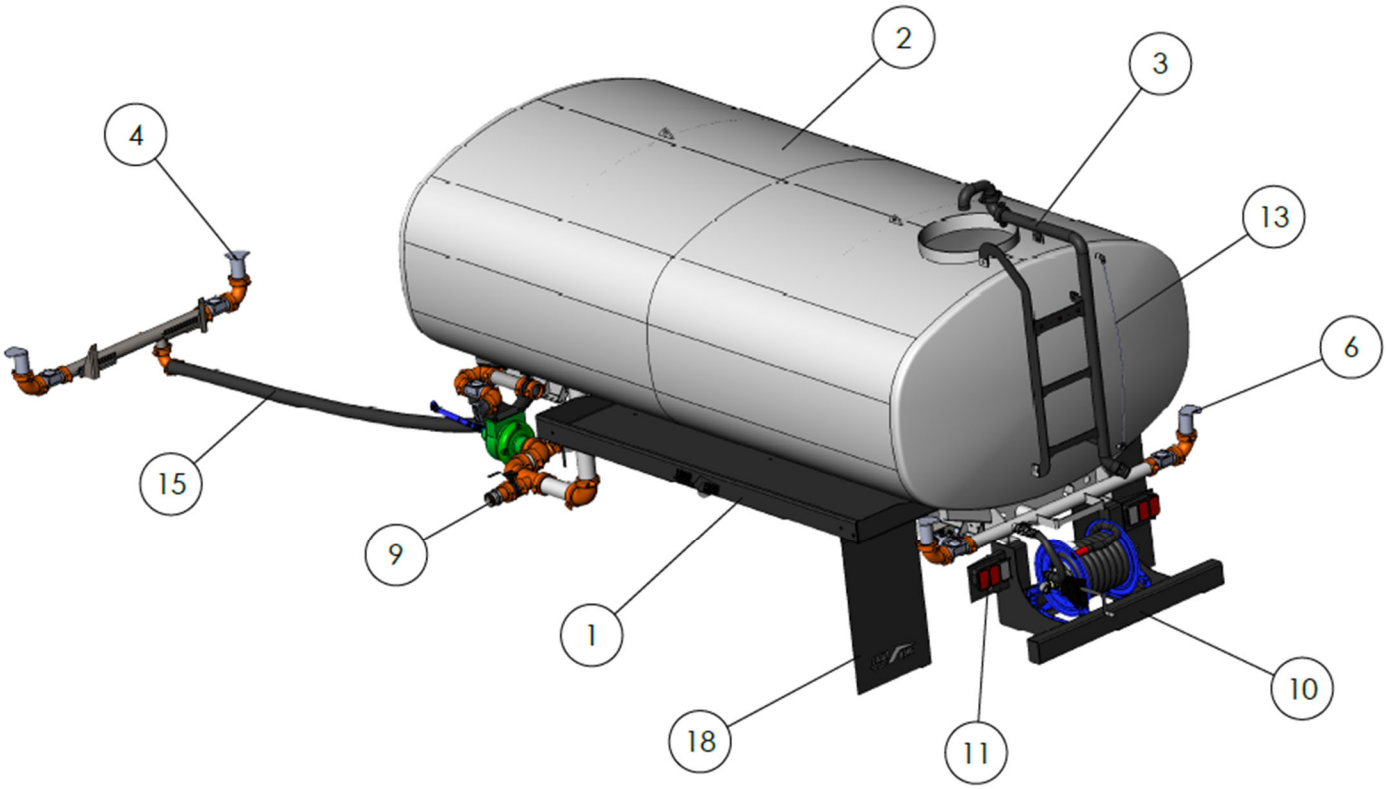

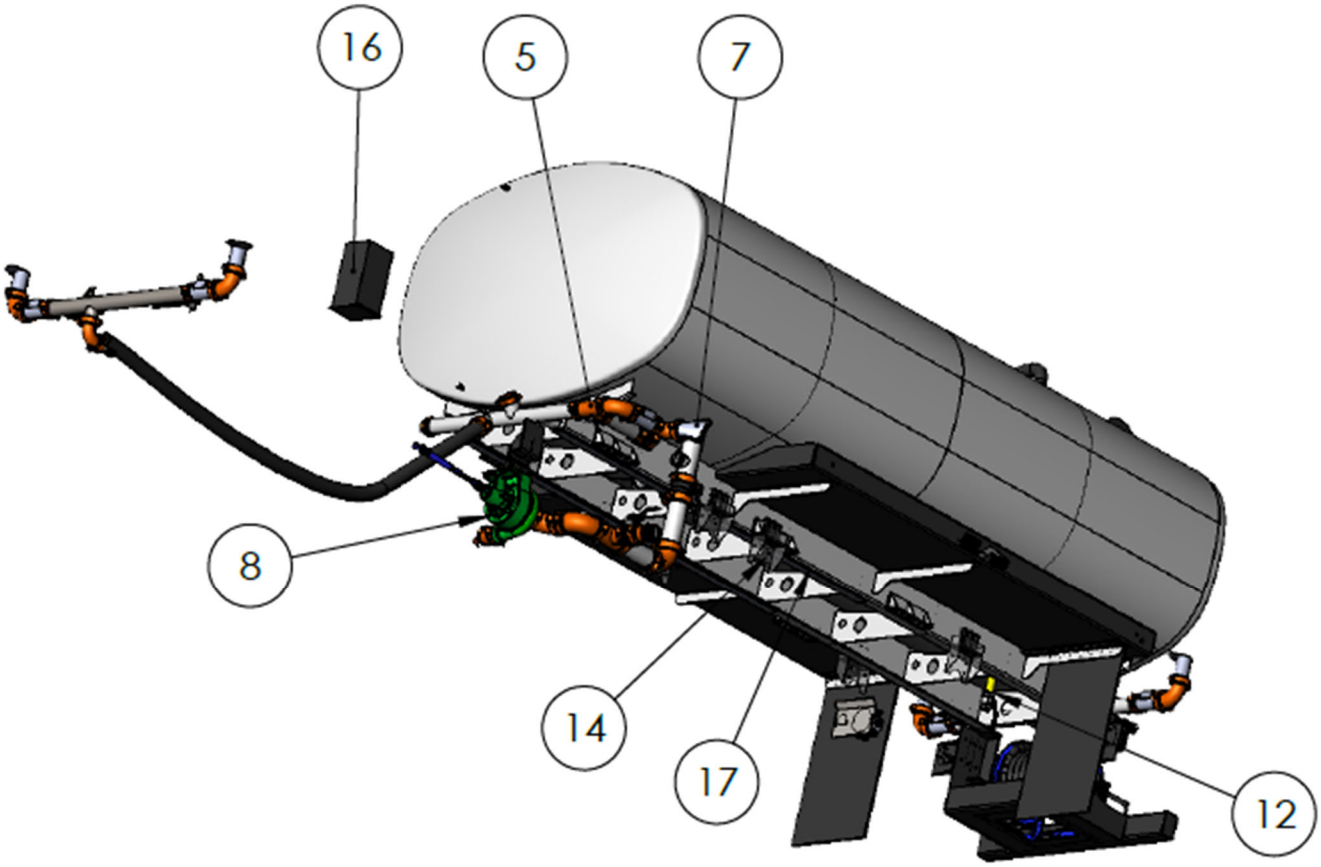

LOAD KING BY CUSTOM TRUCK 1 SOURCE

ASSEMBLY: WATER TRUCK KIT .

ITEM NO.	PART NUMBER	DESCRIPTION	QTY.
1	WTR00038	WELDMENT, HOSE TRAY TANDEM AXLE	2
2	WTR00083	WELDMENT 4000GAL WATER TANK	1
3	WTR00092	ASSEMBLY LADDER 2.5" FILL PIPE	1
4	WTR00093	ASSEMBLY FRONT SPRAY FLAT HEAD	1
5	WTR00094	ASSEMBLY MID SPRAY BAR	1
6	WTR00095	ASSEMBLY REAR SPRAY BAR	1
7	WTR00097	ASSEMBLY SIDE SPRAY	1
8	WTR00098	ASSEMBLY PUMP	1
9	WTR00099	ASSEMBLY SUCTION PIPING	1
10	WTR00103	ASSEMBLY HOSE REEL	1
11	WTR00104	ASSEMBLY LIGHTING WATER TRUCK	1
12	WTR00106	ASSEMBLY 1.5" TANK DRAIN	1
13	WTR00107	ASSEMBLY SIGHT TUBE	1
14	WTR00110	ASSEMBLY MOUNTING COMPONENTS	1
15	WTR00112	ASSEMBLY, HOSES	1
16	WTR00113	ASSEMBLY CONTROLS	1
17	WTR00169	.25" RUBBER ISOLATOR	2
18	WTR00183	ASSEMBLY MUDFLAP INSTALL	1

WTR00038 WELDMENT, HOSE TRAY TANDEM AXLE .

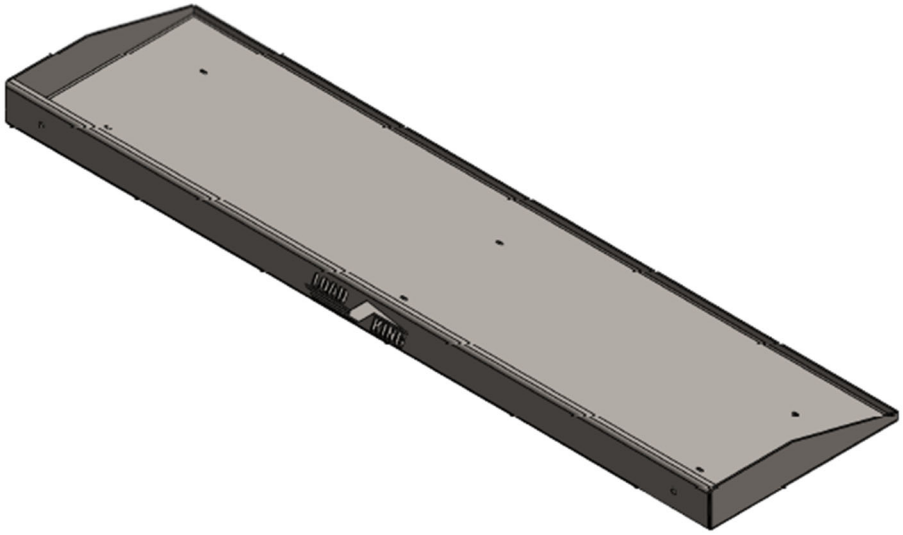

ITEM NO.	PART NUMBER	DESCRIPTION	QTY.
1	WTR00038	WELDMENT, HOSE TRAY TANDEM AXLE	2

WTR00083 WELDMENT, 4000GAL WATER TANK .

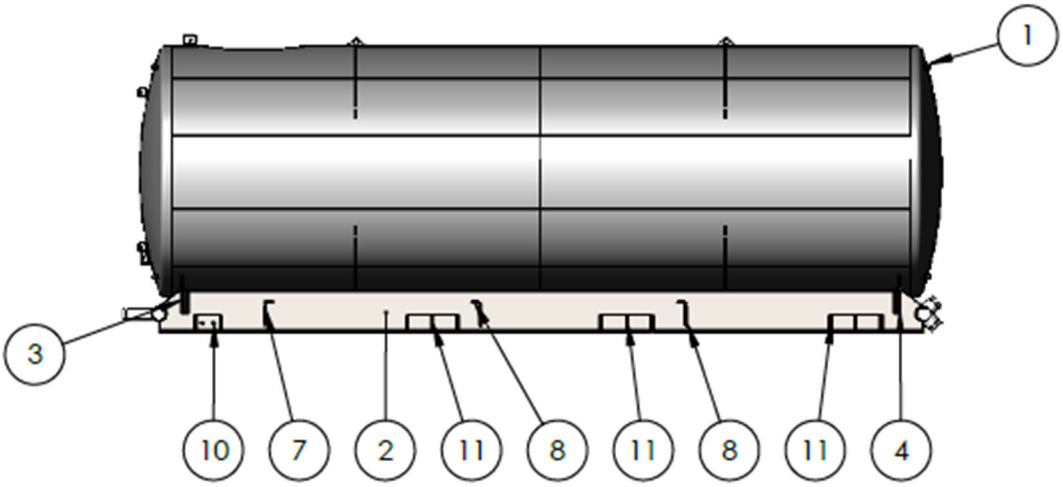

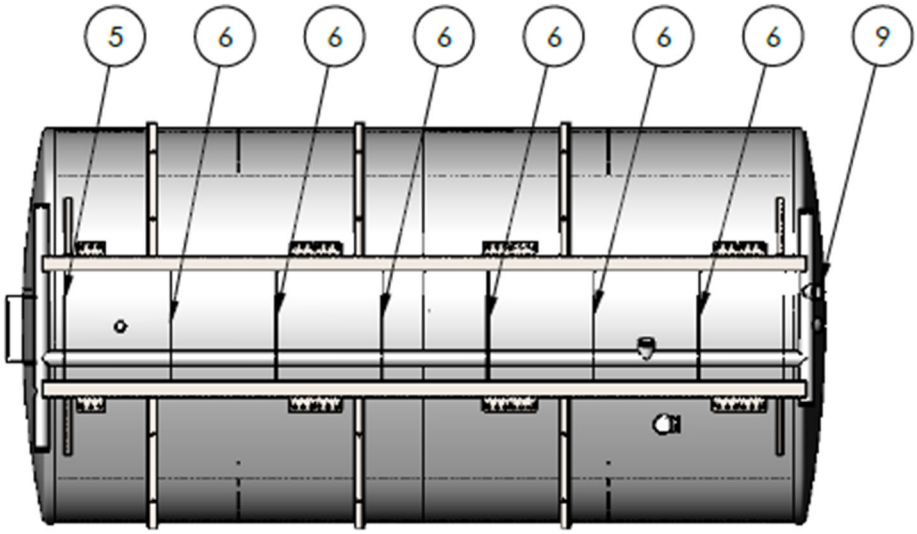

ITEM NO.	PART NUMBER	DESCRIPTION	QTY.
1	WTR00049	WELDMENT, 4000 GAL TANK SHELL	1
2	WTR00041	PLATE, TANK SILL 140"	2
3	WTR00039	PLATE, OUTRIGGER RT	2
4	WTR00040	PLATE, OUTRIGGER LT	2
5	WTR00042	PLATE, SILL END CROSSMEMBER	2
6	WTR00043	PLATE, SILL CROSSMEMBER	6
7	WTR00015	PLATE, HOSE TRAY SUPPORT RT	3
8	WTR00016	PLATE, HOSE TRAY SUPPORT LT	3
9	WTR00044	WELDMENT PIPE, 3" PRESSURE PIPING 184"	1
10	WTR00171	WLDMT, MOUNT TANK, TOP x 1	2
11	WTR00172	WLDMT, MOUNT TANK, TOP x 1	6

WTR00092 ASSEMBLY, LADDER W/ 2.5’’ FILL PIPE .

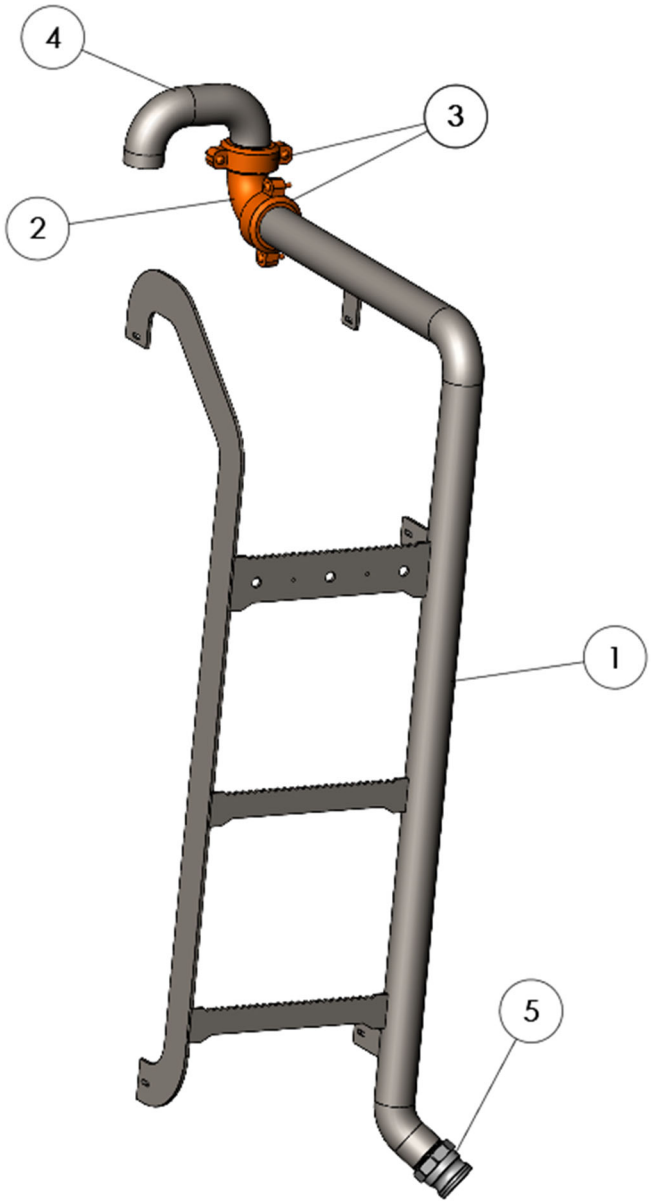

ITEM NO.	PART NUMBER	DESCRIPTION	QTY.
1	WTR00010	WELDMENT, PIPE LADDER ASM	1
2	WTR00170	2.5" ELBOW VIC 90°	1
3	WTR00117	2.5" VIC COUPLING STYLE 77 FLEX	2
4	WTR00091	PIPE, SWING OVER, 2.5" FILL	1
5	WTR00118	2.5" A-STYLE CAMLOCK CPLG	1

WTR00093 ASSEMBLY, FRONT SPRAY FLAT HEAD .

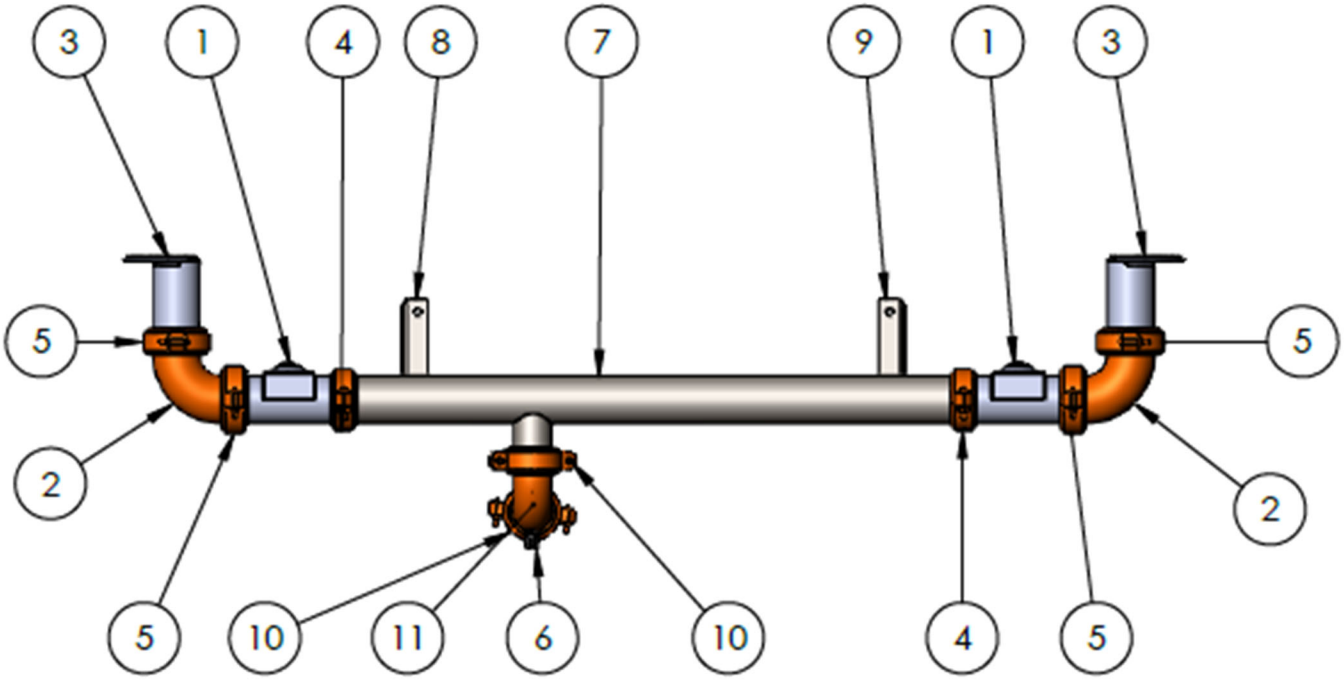

ITEM NO.	PART NUMBER	DESCRIPTION	QTY.
1	WTR00120	3" INLINE GROOVE VALVE	2
2	WTR00121	3" ELBOW VIC 90°	2
3	WTR00122	SPRAYER, FLAT FAN HEAD, TALL	2
4	WTR00123	3" VIC COUPLING STYLE 07 RIGID	2
5	WTR00124	3" VIC COUPLING STYLE 77 FLEX	4
6	WTR00163	1/4" DRAIN BALL VALVE	1
7	WTR00045	WELDMENT, 3" FRONT BUMPER	1
8	WTR00031	PLATE, FRONT PIPE SUPPORT RT	1
9	WTR00032	PLATE, FRONT PIPE SUPPORT LT	1
10	WTR00117	2.5" VIC COUPLING STYLE 77 FLEX	2
11	WTR00170	2.5" ELBOW VIC 90°	1

WTR00094 ASSEMBLY, MID SPRAY BAR .

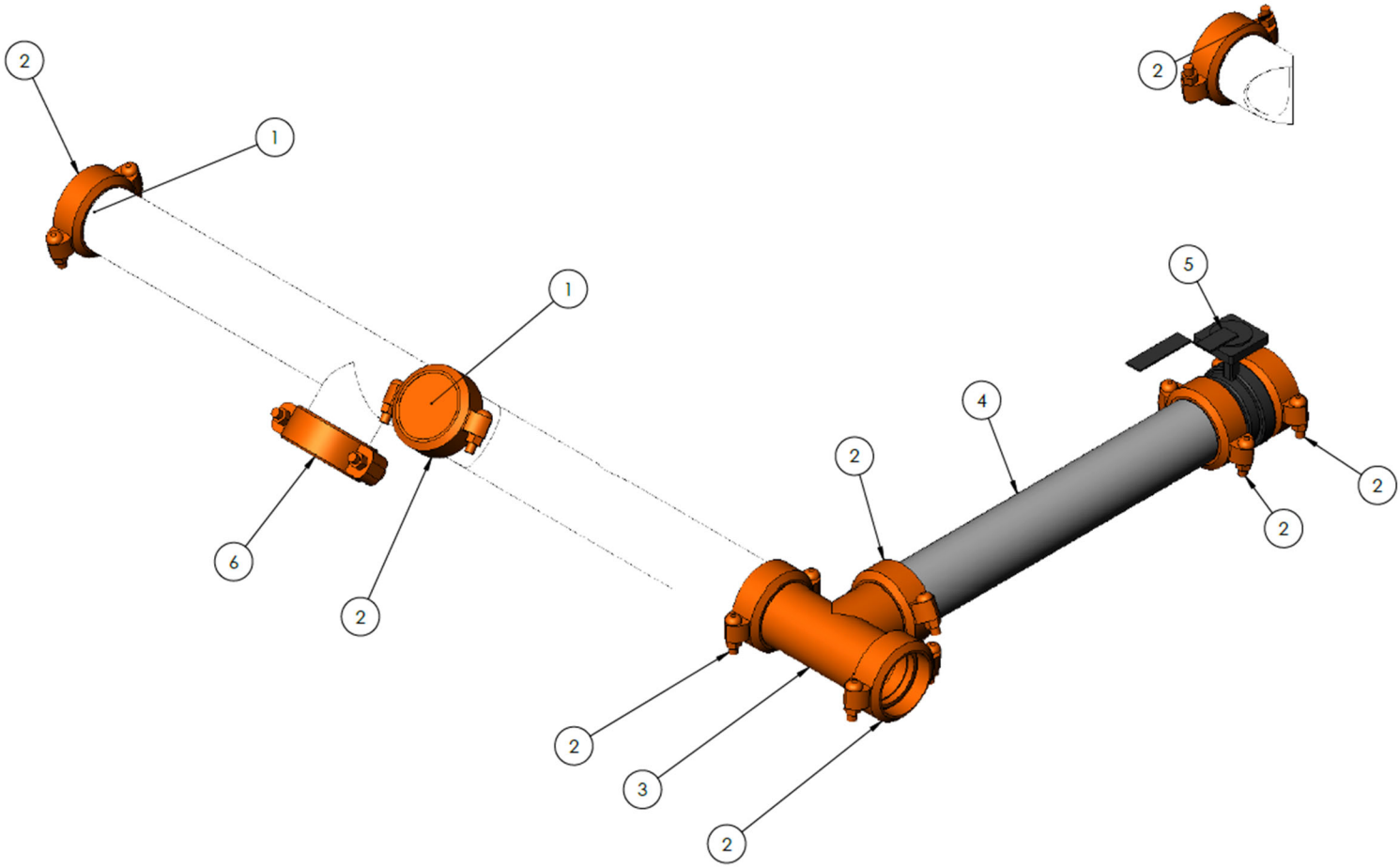

ITEM NO.	PART NUMBER	DESCRIPTION	QTY.
1	WTR00126	3" VIC CAP #60	2
2	WTR00123	3" VIC COUPLING STYLE 07 RIGID	8
3	WTR00127	3" VIC TEE #20	1
4	WTR00153	3" PIPE, SCH 40	1
5	WTR00128	3.0" GROOVE BUTTERFLY VALVE	1
6	WTR00186	3"X2.5" REDUCING COUPLING	1

WTR00095 ASSEMBLY, REAR SPRAY BAR .

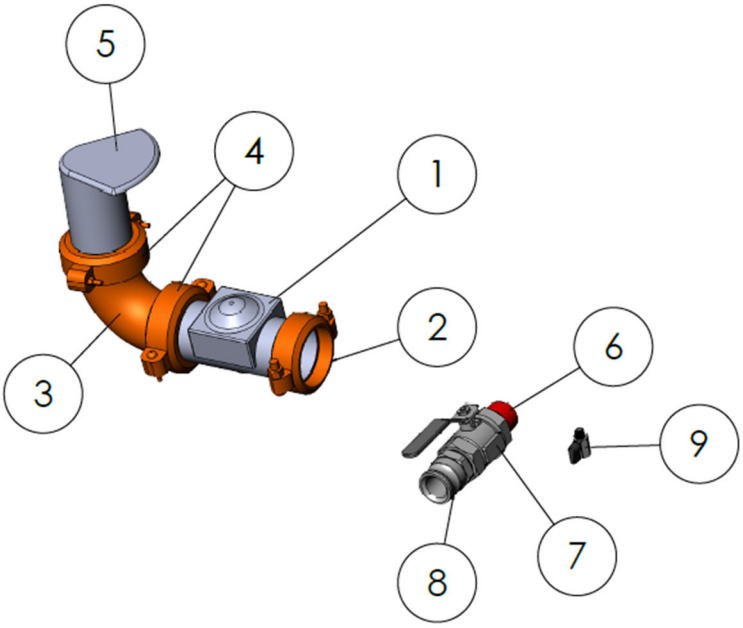

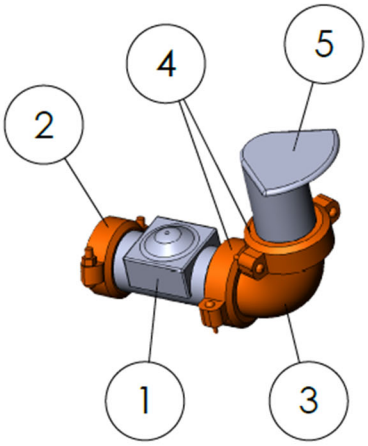

ITEM NO.	PART NUMBER	DESCRIPTION	QTY.
1	WTR00120	3" INLINE GROOVE VALVE	2
2	WTR00123	3" VIC COUPLING STYLE 07 RIGID	2
3	WTR00121	3" ELBOW VIC 90°	2
4	WTR00124	3" VIC COUPLING STYLE 77 FLEX	4
5	WTR00122	SPRAYER, FLAT FAN HEAD, TALL	2
6	WTR00154	1.5' CLOSE NIPPLE	1
7	WTR00145	1.5" BALL VALE	1
8	WTR00129	1.5" F-STYLE CAMLOCK	1
9	WTR00163	1/4" DRAIN BALL VALVE	1

WTR00097 ASSEMBLY, SIDESPRAY .

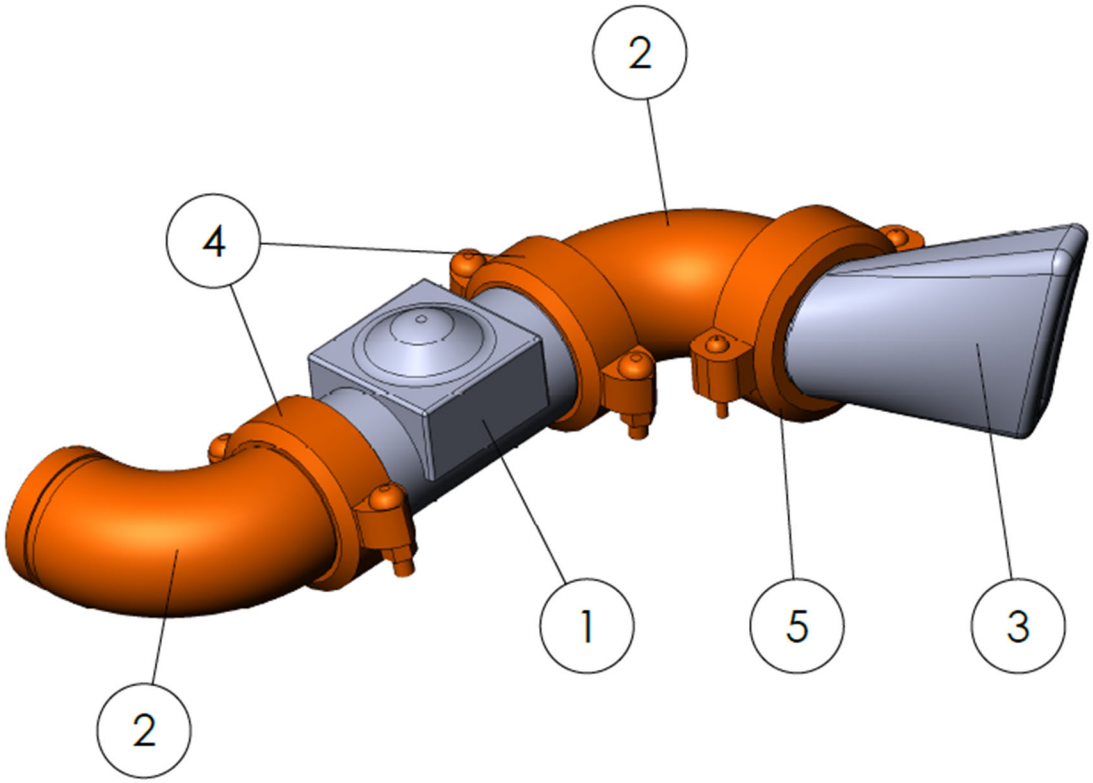

ITEM NO.	PART NUMBER	DESCRIPTION	QTY.
1	WTR00120	3" INLINE GROOVE VALVE	1
2	WTR00121	3" ELBOW VIC 90°	2
3	WTR00131	3" FIN SIDE SPRAYER	1
4	WTR00123	3" VIC COUPLING STYLE 07 RIGID	2
5	WTR00124	3" VIC COUPLING STYLE 77 FLEX	1

WTR00098 ASSEMBLY, PUMP .

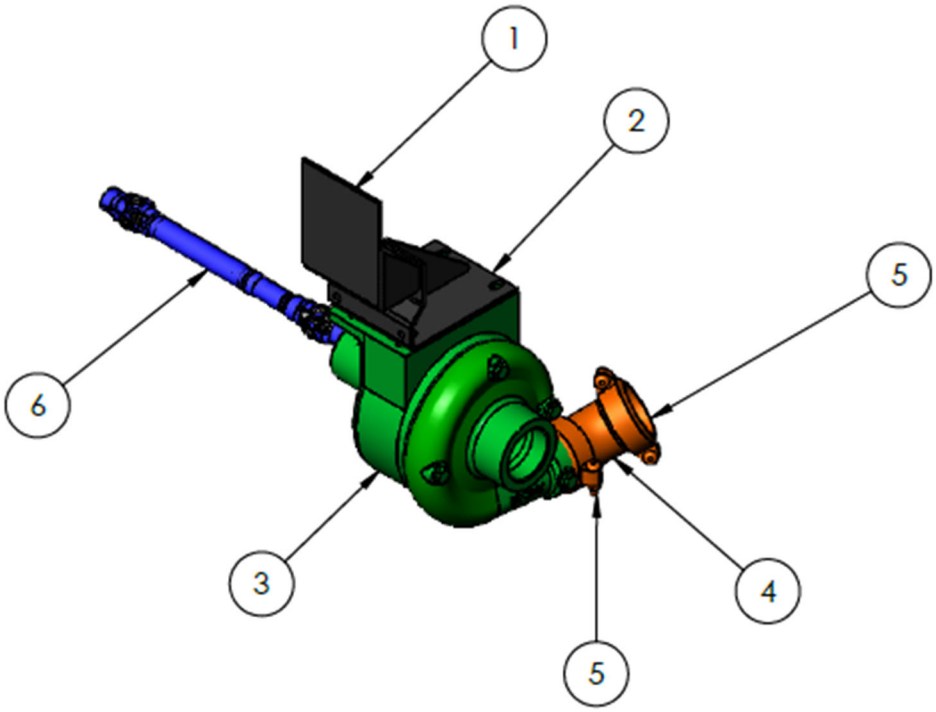

ITEM NO.	PART NUMBER	DESCRIPTION	QTY.
1	WTR00108	WELDMENT, PUMP MOUNT, UPPER	1
2	WTR00109	WELDMENT, PUMP MOUNT, LOWER	1
3	WTR00132	4" in x 3" out shaft driven - B3Z Rope Packing Pump (CW Groove)	1
4	WTR00133	3.0" VIC 45 DEG. ELBOW #11	1
5	WTR00123	3" VIC COUPLING STYLE 07 RIGID	2
6	WTR00202	PTO DRIVE SHAFT	1
7 B	WTR00262*	PUMP ROPE PACKING KIT	1

NOTE: * ITEMS NOT SHOWN IN ILLUSTRATION

WTR00099 ASSEMBLY, SUCTION PIPING .

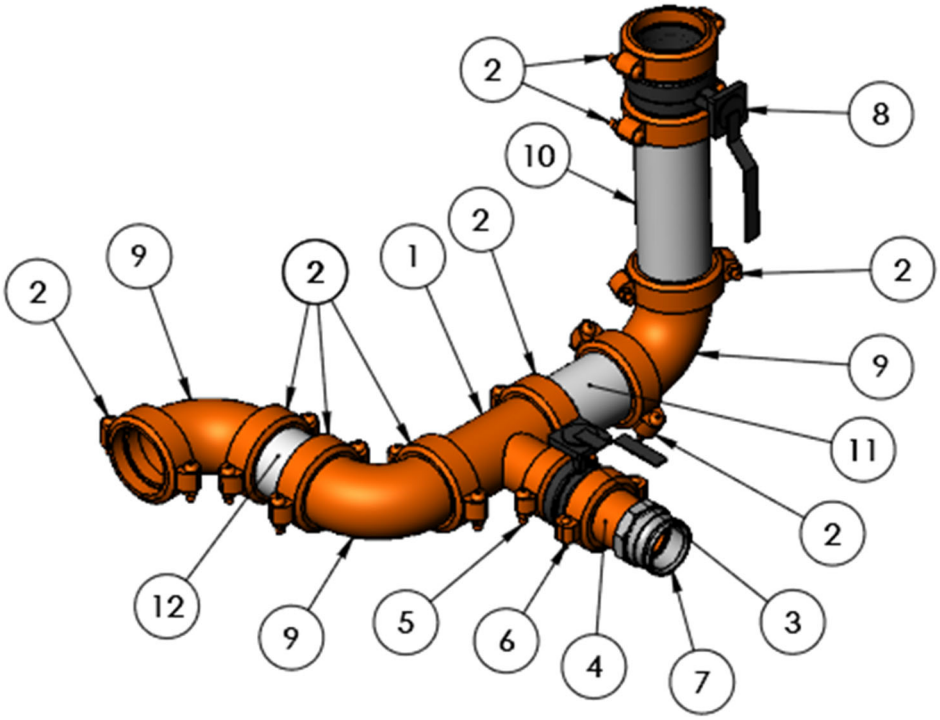

ITEM NO.	PART NUMBER	DESCRIPTION	QTY.
1	WTR00134	4x4x3 VIC REDUCING TEE #25	1
2	WTR00135	4" VIC COUPLING STYLE 07 RIGID	9
3	WTR00128	3.0" GROOVE BUTTERFLY VALVE	1
4	WTR00136	3" NIPPLE GROOVE MNPT	1
5	WTR00123	3" VIC COUPLING STYLE 07 RIGID	1
6	WTR00124	3" VIC COUPLING STYLE 77 FLEX	1
7	WTR00137	3" A-STYLE CAMPLOCK	1
8	WTR00139	4.0" GROOVE BUTTERFLY VALVE	1
9	WTR00177	4" 90DEG GROOVE ELBOW	3
10	4in pipe	4" PIPE, SCH 40	1
11	4in pipe	4" PIPE, SCH 40, VICTAULIC ENDS	2
12	4in pipe	4" PIPE	1

WTR00103 ASSEMBLY, HOSE REEL .

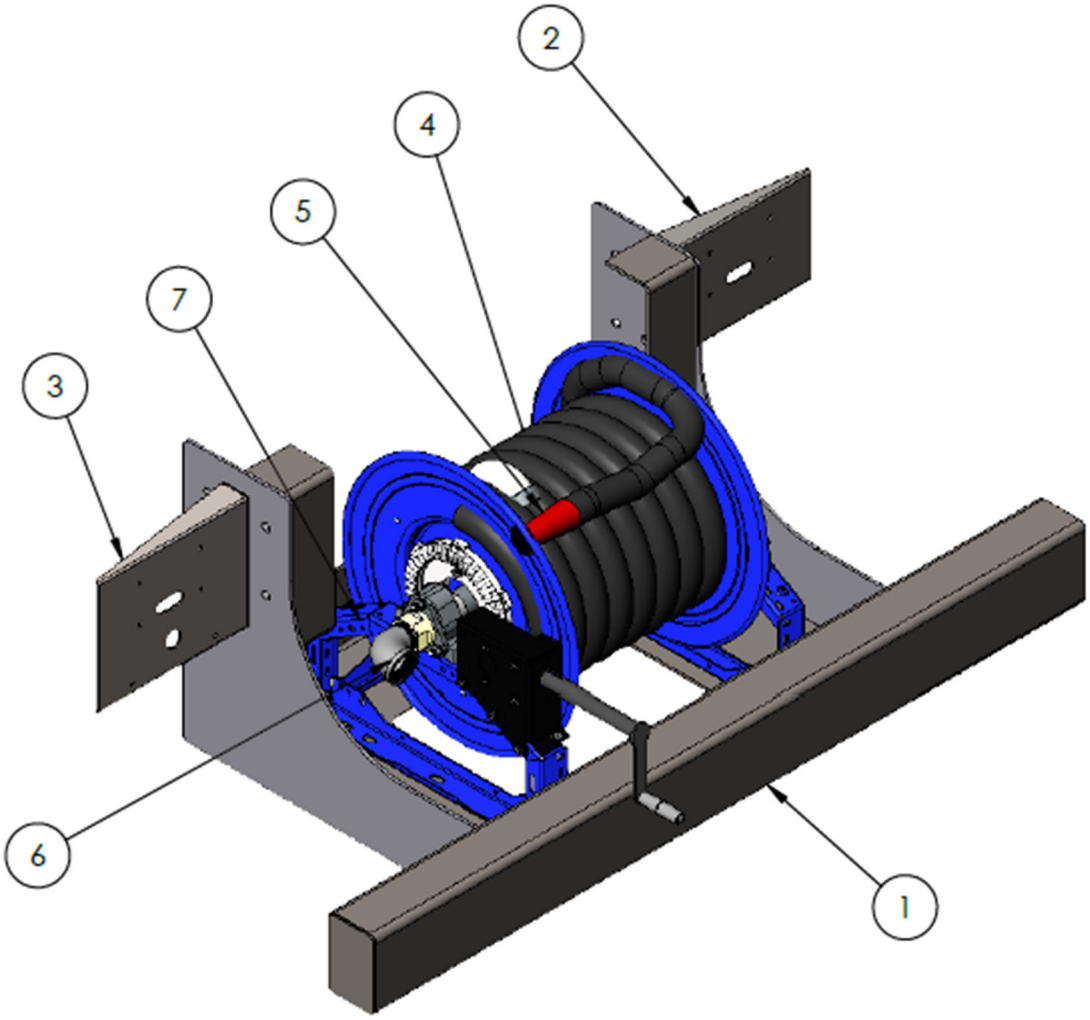

ITEM NO.	PART NUMBER	DESCRIPTION	QTY.
1	WTR00004	WELDMENT, BUMPER SHELF	1
2	WTR00101	RIGHT S/T/T BRACKET	1
3	WTR00102	LEFT S/T/T BRACKET	1
4	WTR00143	1.5in x 50ft hose	1
5	WTR00144	SPRAY NOZZLE	1
6	WTR00141	1.5" STREET ELBOW	1
7	WTR00191	1.5"x50' MANUAL REWIND REEL, STRAIGHT SWIVEL	1

WTR00104 ASSEMBLY, LIGHTING, WATER TRUCK .

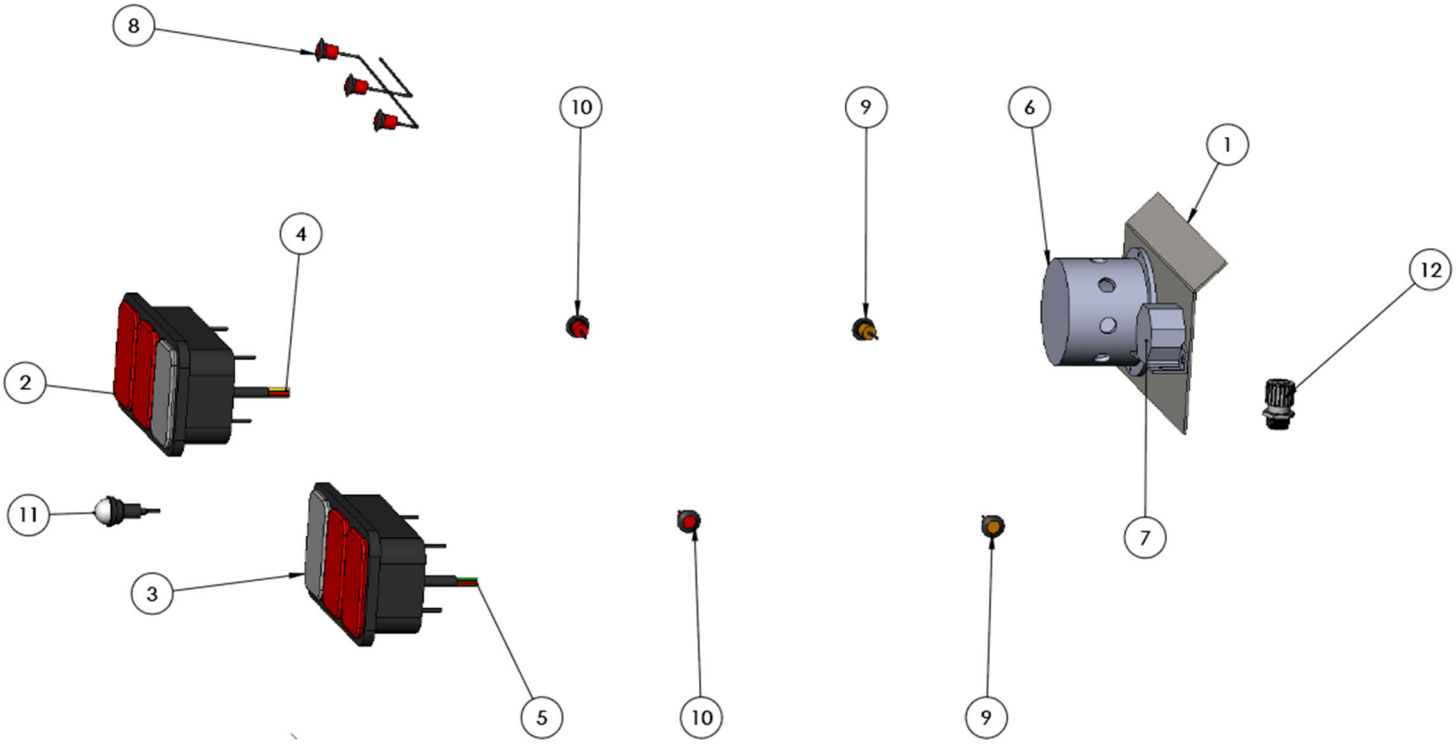

ITEM NO.	PART NUMBER	DESCRIPTION	QTY.
1	WTR00105	MOUNTING PLATE, D.O.T. JUNCTION BOX	1
2	WTR00155	MDL 45 MODULE LH	1
3	WTR00156	MDL 45 MODULE RH	1
4	WTR00157	144"" LH 3 PLUG S/T/T AND BA	1
5	WTR00158	144"" RH 3 PLUG S/T/T AND BA	1
6	WTR00159	JUNCTION BOX KIT-SURFACE MOUNT	1
7	WTR00161	ALARM,BACK-UP, 97DB 12 VDC	1
8	WTR00174	3 LIGHT ID, ROUND LED, RED	1
9	WTR00185	Amber 33 Series marker & clearance kit	2
10	WTR00160	Red 33 Series marker & clearance kit	2
11	WTR00180	LICENSE PLATE LIGHT, 1.25" MOUNT	1
12	WTR00201	3/4in strain relief	4

WTR00106 ASSEMBLY, 1.5” TANK DRAIN .

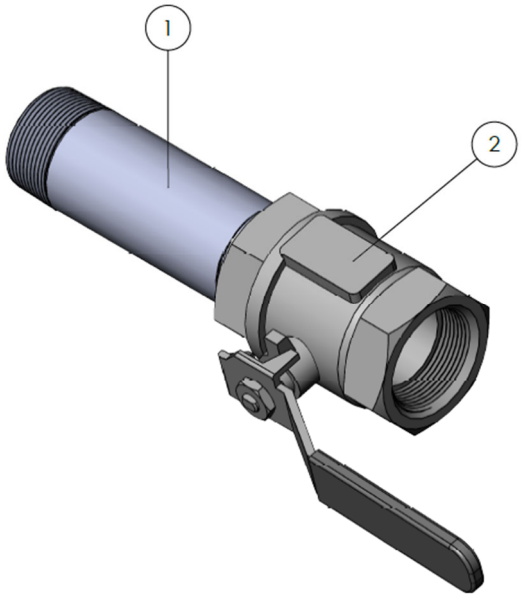

ITEM NO.	PART NUMBER	DESCRIPTION	QTY.
1	WTR00164	1-1/2" BLK STEEL NIPPLE, 6"	1
2	WTR00145	1.5" BALL VALVE	1

WTR00107 ASSEMBLY, SIGHT TUBE .

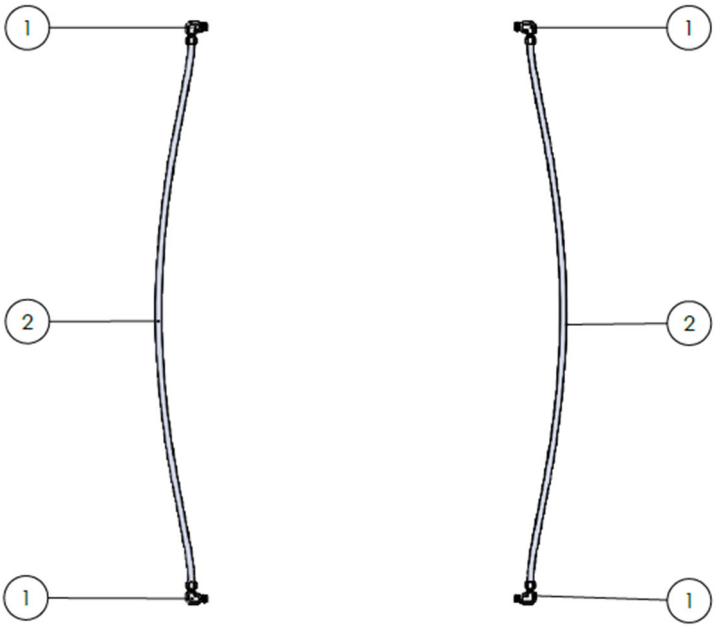

ITEM NO.	PART NUMBER	DESCRIPTION	QTY.
1	WTR00165	1/2" BRASS FITTING	4
2	WTR00146	1/2" CLEAR HOSE	20FT

WTR00110 ASSEMBLY, MOUNTING COMPONENTS .

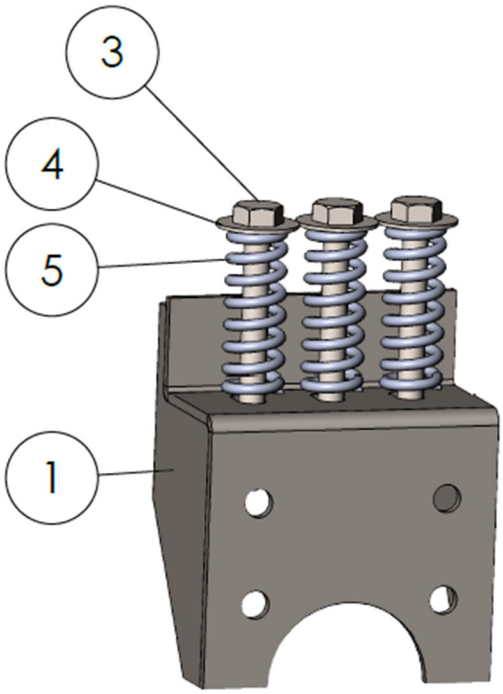

FRONT/MIDDLE

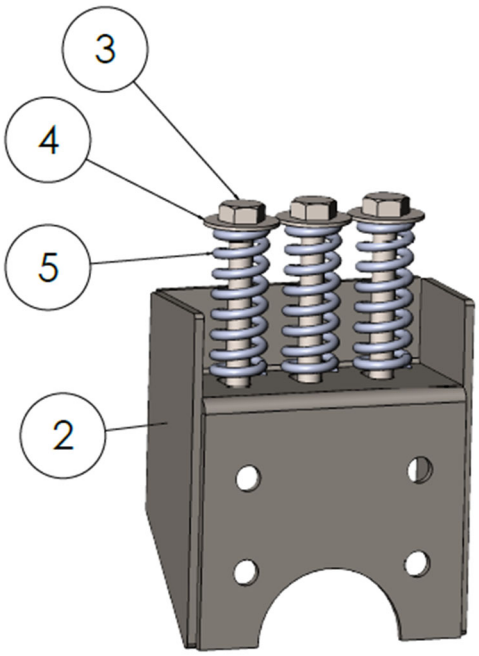

REAR

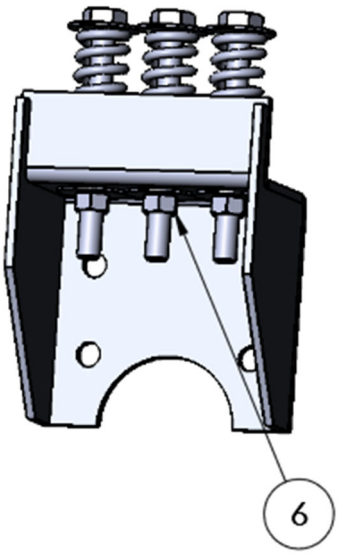

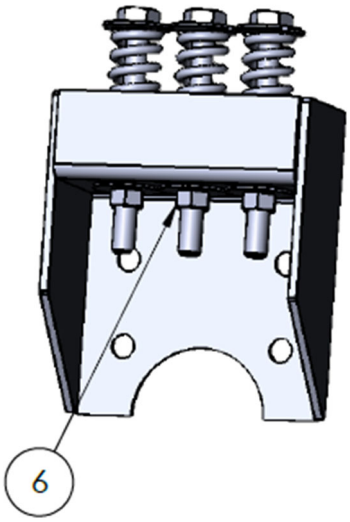

ITEM NO.	PART NUMBER	DESCRIPTION	QTY.
1	WTR00184	WLDMT, TRUCK MOUNT, BOTTOM	4
2	WTR00230	WLDMT, TRUCK MOUNT, BOTTOM REAR	2
3	WTR00192	7" HEX BOLT 5/8"-11 UNC	18
4	WTR00193	.500 FLAT WASHER	36
5	WTR00181	COMPRESSION SPRING 4H 1.5OD .25WD 6.5AC	18
6	WTR00194	5/8"-11 HEX NUT	18

WTR00112 ASSEMBLY, HOSES .

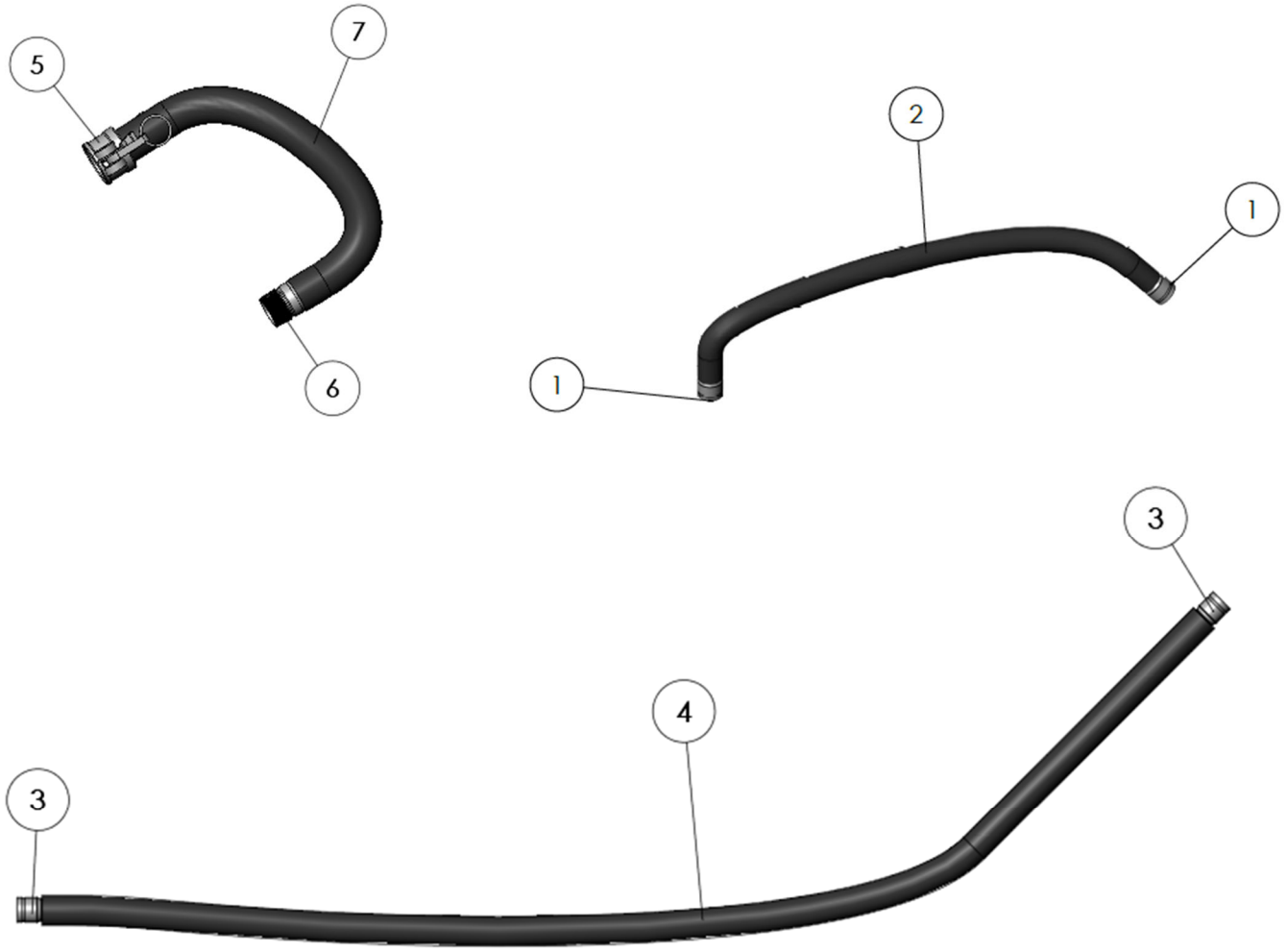

ITEM NO.	PART NUMBER	DESCRIPTION	QTY.
1	WTR00125	3" NIPPLE GROOVE x BARB	2
2	WTR00114	3" ID HOSE, 150PSI TO 30IN.HG, MBR 9	1
3	WTR00190	2.5" NIPPLE GROOVE x BARB	2
4	WTR00200	2.5" ID HOSE, 150PSI TO 30IN.HG, MBR 9	1
5	WTR00130	1.5" C-STYLE CAMLOCK	1
6	WTR00142	1.5" NIPPLE BARBxMNPT	1
7	WTR00115	1.5" ID HOSE, 150PSI TO 30IN.HG, MBR 9	1

WTR00113 ASSEMBLY, CONTROLS .

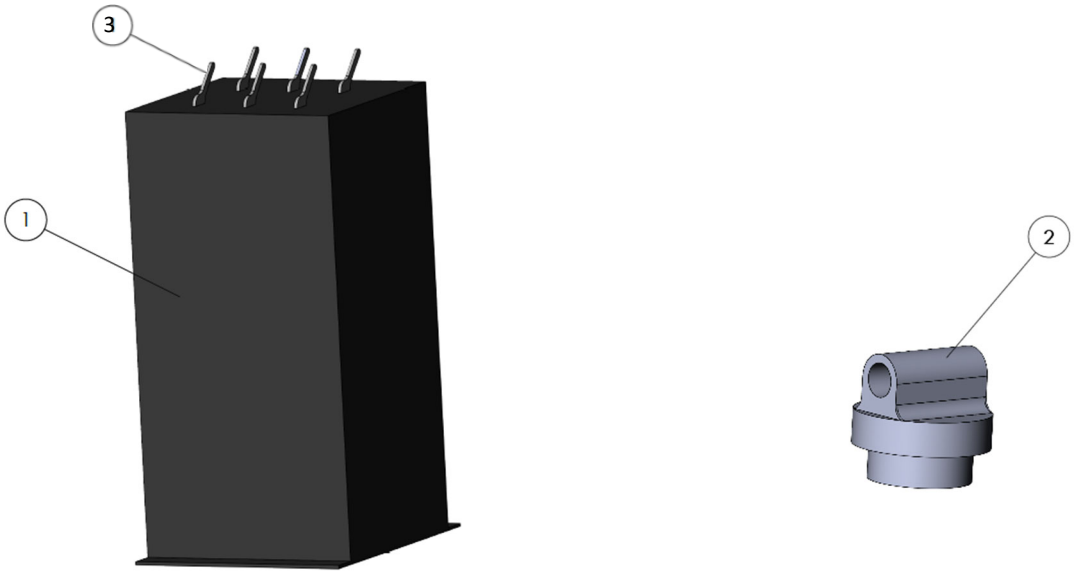

ITEM NO.	PART NUMBER	DESCRIPTION	QTY.
1	WTR00152	5 Switch Enclosed Air Control Panel, 16"	1
2	90555398	PPV 90 PSI	1
3 C	WTR00277	AIR CONTROL SWITCH	5

WTR00169 .25" RUBBER ISOLATOR .

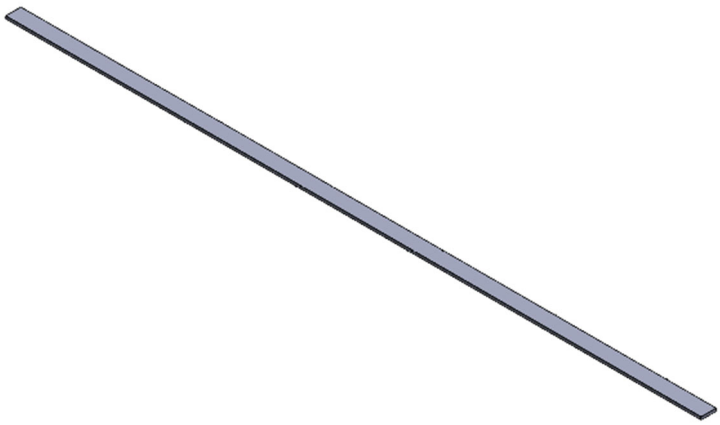

ITEM NO.	PART NUMBER	DESCRIPTION	QTY.
1	WTR00169	.25" TANK ISOLATOR	2

WTR00183 ASSEMBLY, MUSFLAP INSTALL .

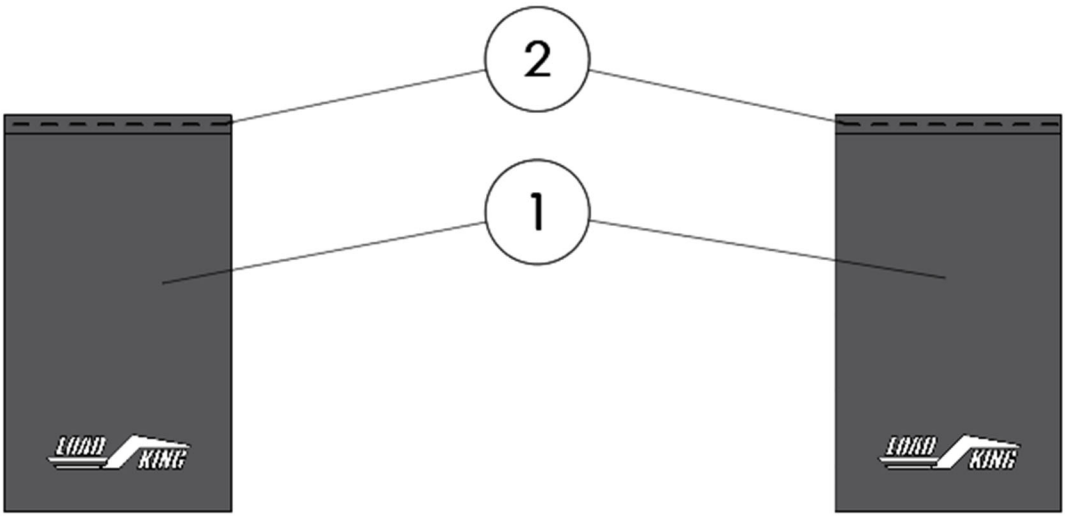

ITEM NO.	PART NUMBER	DESCRIPTION	QTY.
1	LoadKing MUDFLAPS	MUDFLAP 3/8"X24"X42" BLK RUBBER MESH REINFORCED	2
2	033-00053	MUD FLAP RETAINING STRAP	2

Load King

PO Box 427

Elk Point, South Dakota, USA 57025-0427

Toll Free: (888) 264-5522